# XC-ES50/ES50CE
# XC-ES51/ES51CE
# XC-ES30/ES30CE

TV Format Output | *1 1/2 Type CCD | *2 1/3 Type CCD | C Lens Mount | VS Output | HD VD External Sync | Restart Reset | Long Exposure | Normal Shutter | Mode 1 (Non-Reset Mode) External Trigger Shutter | Mode 2 (Non-Reset Mode) External Trigger Shutter

*1 :XC-ES50/ES50CE/ES51/ES51CE
*2 :XC-ES30/ES30CE

Switch setting P84
Connection Diagram P86

## Outline

The XC-ES series is a small-sized lightweight monochrome camera module designed as an input device for image processing, realized through the newest high-density packaging.
The downsized the main body allows to set the XC-ES series easily at the places where is difficult to set the existing devices.

## Features

- XC-ES50/ES50CE: 1/2-type IT CCD
- XC-ES51/ES51CE: 1/2-type IT CCD (High sensitivity)
- XC-ES30/ES30CE: 1/3-type IT CCD
- High SN ratio: 60 dB
- External trigger shutter
  XC-ES50/ES51/ES30: 1/4 s to 1/10,000 s
  XC-ES50CE/ES51CE/ES30CE: 1/4 s to 1/8,000 s
- Electronic shutter
  XC-ES50/ES51/ES30: 1/100 s to 1/10,000 s
  XC-ES50CE/ES51CE/ES30CE: 1/120 s to 1/8,000 s
- 2:1 Interlaced/Non-Interlaced
- Frame/Field accumulation
- Restart/Reset
- Sync system: Internal/External (HD/VD)
- High Shock and Vibration Resistance

## Accessories

- Compact camera adaptor
  - DC-700/700CE
- 12-pin camera cable (CE standard)
  - CCXC-12P02N (2 m)
  - CCXC-12P05N (5 m)
  - CCXC-12P10N (10 m)
  - CCXC-12P25N (25 m)
- Tripod adaptor
  - VCT-333I

## Dimensions

Camera body of all XC-E models

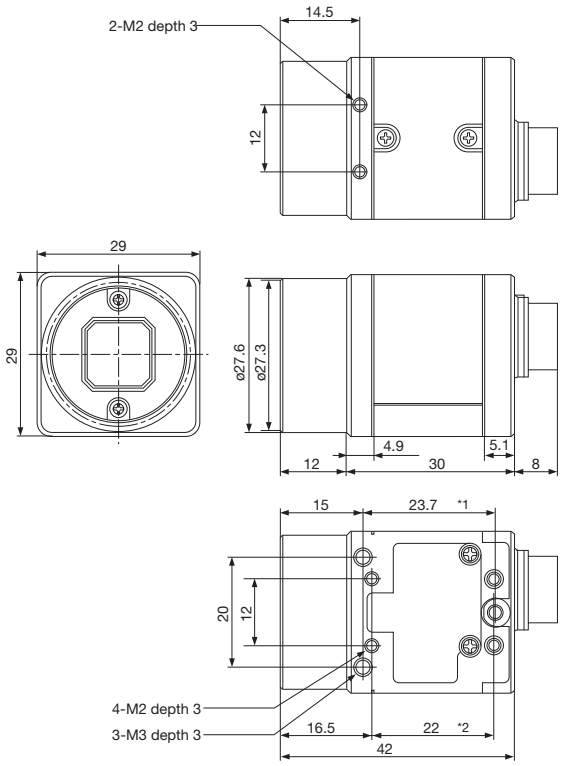


Unit: mm

*1: M3 screw size
*2: M2 screw size

**Notice**

From January 2005, the outside dimensions of XC-E series consoles will be changed to the same dimensions of XC-HR series consoles.

## Spectral Sensitivity Characteristics

### • XC-ES50/XC-ES51/XC-ES30
(Typical Values)

Relative sensitivity

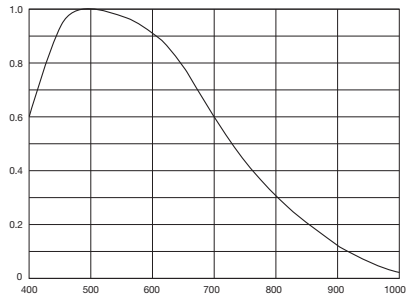


Wavelength (nm)

(Lens characteristics and light source characteristics excluded.)

### • XC-ES50CE/XC-ES51CE/XC-ES30CE
(Typical Values)

Relative sensitivity

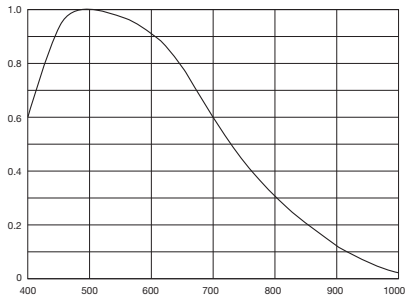


Wavelength (nm)

(Lens characteristics and light source characteristics excluded.)

### • XC-ES51, XC-ES50/XC-ES30
(Comparison sensitivity)

Relative sensitivity

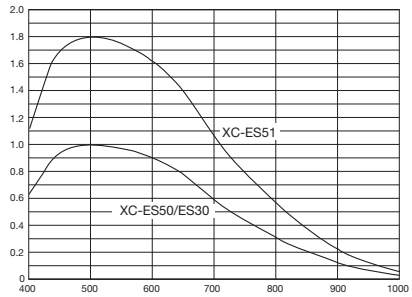


Wavelength (nm)

(Lens characteristics and light source characteristics excluded.)

### • XC-ES51CE, XC-ES50CE/XC-ES30CE
(Comparison sensitivity)

Relative sensitivity

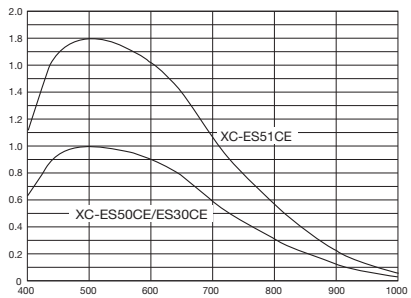


Wavelength (nm)

(Lens characteristics and light source characteristics excluded.)

## Specifications

| | XC-ES50 | XC-ES51 | XC-ES30 | XC-ES50CE | XC-ES51CE | XC-ES30CE |
|---|---|---|---|---|---|---|
| Image device | 1/2-type IT CCD | | 1/3-type IT CCD | 1/2-type IT CCD | | 1/3-type IT CCD |
| Signal system | EIA | | | CCIR | | |
| Effective picture elements (H × V) | 768 × 494 | | | 752 × 582 | | |
| Effective lines (H × V) | 752 × 485 | | | 736 × 575 | | |
| Cell size (H × V) | 8.4 μm × 9.8 μm | | 6.35 μm × 7.4 μm | 8.6 μm × 8.3 μm | | 6.5 μm × 6.25 μm |
| Horizontal frequency | 15.734 kHz | | | 15.625 kHz | | |
| Vertical frequency | 59.94 Hz | | | 50 Hz | | |
| Lens mount | C-mount | | | | | |
| Sync system | Internal/External (Automatically switched according to input signal) | | | | | |
| External sync signal input | HD/VD (HD/VD level: 2 V to 5 Vp-p) | | | | | |
| External sync frequency | ±1% (in horizontal sync frequency) | | | | | |
| H Jitter | less than ±20 nsec | | | | | |
| Scanning system | 525 lines: 2:1 Interlaced (Automatic switching according to input signal) | | | 625 lines: 2:1 Interlaced (Automatic switching according to input signal) | | |
| Video output | 1.0 Vp-p, negative, 75 Ω unbalanced | | | | | |
| Horizontal resolution | 570 TV lines | | | 560 TV lines | | |
| Sensitivity | 400 lx F5.6 | 400 lx F8 | 400 lx F4 | 400 lx F5.6 | 400 lx F8 | 400 lx F4 |
| | (γ =ON, MIN GAIN) | | | | | |
| Minimum illumination* | 0.3 lx | 0.2 lx | 0.3 lx | 0.3 lx | 0.2 lx | 0.3 lx |
| SNR | 60 dB | | | | | |
| Gain | AGC/Manual (Adjustable on the rear panel) | | | | | |
| Gamma | ON/OFF (Adjustable on the rear panel) | | | | | |
| Normal shutter | 1/100 s to 1/10,000 s | | | 1/120 s to 1/8,000 s | | |
| External trigger shutter | 1/4 s to 1/10,000 s | | | 1/4 s to 1/8,000 s | | |
| Power requirements | DC 12 V (9 V to 16 V) | | | | | |
| Power consumption | 1.6 W | | 1.4 W | 1.6 W | | 1.4 W |
| Dimension (W × H × D) | 29 × 29 × 30 mm (excluding protrusions) | | | | | |
| Mass | Approx. 50 g | | | | | |
| Operating temperature | –5°C to +45°C | | | | | |
| Storage temperature | –30°C to +60°C | | | | | |
| Performance guarantee temperature | 0°C to 40°C | | | | | |
| Operating humidity | 20% to 80% (no condensation) | | | | | |
| Storage humidity | 20% to 95% (no condensation) | | | | | |
| Vibration resistance | 10 G (20 Hz to 200 Hz 20 minutes for each direction–x, y, z) | | | | | |
| Shock resistance | 70 G | | | | | |
| MTBF | 126,469 hours (Approx. 14.4 years) | | | | | |
| Regulatory compliance | UL1492, FCC/ICES-003: Class B, CE: EN61326, AS/NZ: EN61326, KC: KN22/KN24: Class A | | | | | |
| Supplied accessories | Lens mount cap (1), Operating instructions (1) | | | | | |

* F1.4, r=ON, MAX GAIN

Sales: Shenzhen Sunnywale Inc, www.sunnywale.com , awin@sunnywale.com , Wechat: 9308762